Specification Guide

# NNR 45-150 TRAYPACK
# NNR 45-150 CREW TRAYPACK

## Weight Ratings

| | |
|---|---|
| **GVM** | 4,500 kg |
| **GCM[1]** | 8,000 kg |
| **Towing Capacity[1] (at 4,500kg GVM rating)** | 4,000 kg |

## Engine

| | |
|---|---|
| **Power** | 110 kW @ 2,800 rpm |
| **Torque** | 375 Nm @ 1,280 - 2,800 rpm |

## Transmissions

9-speed Dual-clutch Transmission (DT)

## Wheelbase

3,395 mm

## Ready-to-Work Features

- Corner stirrup with moulded tread plate
- External ratchet rails - rated 600 kg each
- Fold down ear system
- Heavy duty truck aluminium deck - rated to 5 tonne
- Metal encapsulated glass fibre reinforced nylon catches
- New & improved quick lock hinge system
- Powder Coated Window Protector and tail light protector
- Removable dropsides and tailgate with cargo seal for easy tiedown access and load retainment
- Tube headboard with grab handles

Scan QR code to search, view and download full spec sheets for all Isuzu truck models.

6 YEAR FACTORY WARRANTY 24/7 ROADSIDE ASSIST

3 YEAR BODY WARRANTY

ISUZU CARE

# Driveline

## Engine

| | |
|---|---|
| **Description** | Isuzu 4JZ1-TCS |
| **Type** | 4 Cylinder |
| **Power** | 110 kW @ 2,800 rpm |
| **Torque** | 375 Nm @ 1,280 - 2,800 rpm |
| **Displacement** | 2,999 cc |
| **Compression Ratio** | 17.50:1 |
| **Bore x Stroke** | 95 mm x 104 mm |
| **Induction** | Electronically controlled variable nozzle turbocharger with air -to air intercooler. |
| **Fuel Injection** | Direct injection high pressure common rail system |
| **Emission Standard** | ADR 80/04 (pPNLT) |
| **Emission Control** | SCR (Selective Catalytic Reduction)<br>DPD (Diesel Particulate Diffuser)<br>EGR (Exhaust Gas Recirculation) |
| **Auxiliary Brake** | Vacuum controlled exhaust brake |

## Transmission

**DT**

**Description:** Isuzu MYR-9S

**Type:** 9-speed Dual-clutch Transmission (DT) with both fully automatic and clutchless manual operation modes

**Ratios:**

| 1 | 2 | 3 | 4 | 5 | 6 | 7 | 8 | 9 | REV |
|---|---|---|---|---|---|---|---|---|---|
| 5.16 | 3.94 | 2.86 | 2.18 | 1.67 | 1.30 | 1.00 | 0.76 | 0.58 | 4.81 |

**Power Take Off Facility:** Provision on LHS of transmission case. Drive from counter gear.

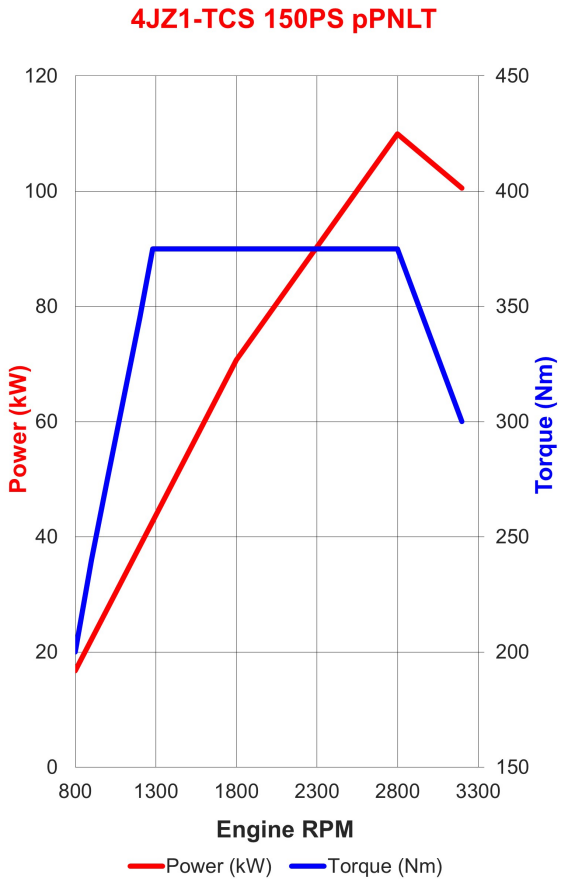


## Clutch

**DT** **Type**: Fully automated dual wet clutch and torque converter (TC) with lock up

## Performance[2] (calculated - typical paved road)

| | | Geared Speed (top gear at peak power engine rpm) | Low Speed Gradeability (lowest forward gear assuming no wheel slip) | Engine Speed (top gear at 100 km/h) |
|---|---|---|---|---|
| **NNR 45-150 DT** | At 4,500 kg GVM | 126 km/h @ 2,800 rpm | 56% | 2,219 rpm |

# Technology & Equipment

## Intelligent Safety

| | |
|---|---|
| ACTIVE SAFETY Advanced Driver Assistance Systems (ADAS) | Advanced Emergency Braking (AEB) |
| | Anti-lock Braking System (ABS) |
| | Anti-Skid Regulator (ASR) |
| | Attention Alert System (AAS) |
| | Automatic Lighting System (ALS) |
| | Distance Warning System (DWS) |
| | Electric Park Brake (EPB) |
| | Electronic Brakeforce Distribution (EBD) |
| | Electronic Stability Control (ESC) |
| | Front Cross Traffic Alert (FCTA) |
| | Full Speed Adaptive Cruise Control (F-ACC) |
| | Intelligent Speed Limiter (ISL) |
| | Intersection Emergency Braking (IEB) |
| | Intersection Warning System (IWS) |
| | Lane Departure Warning (LDW) |
| | Miss Acceleration Mitigation (MAM) |
| | Traffic Movement Warning (TMW) |
| | Traffic Sign Recognition (TSR) |
| PASSIVE SAFETY Cabin Occupant Safety Systems (COSS) | Door mounted cornering lamps |
| | Driver and front left hand passenger seatbelt pretensioners |
| | Driver and front passenger airbags |
| | ECE-R29 cab with side anti-intrusion beams |
| | Overhead shelf restraint netting |

## Accessories[3]

| | | |
|---|---|---|
| Towing | Isuzu Genuine Towbar | • |
| | Isuzu Trailer Wiring Kit | • |
| | Isuzu Electric Trailer Brake Controller Kit | • |
| Lights | Driving Lights | • |
| | Beacons | • |
| Protection | Isuzu Genuine Bull Bar | • |
| | Isuzu Seat Covers | • |
| | Isuzu Floor Mats | • |
| | Isuzu Dash Mats | • |
| | Isuzu Weathershields | • |
| | Isuzu Mudflaps | • |
| Technology | Isuzu Cameras | • |
| | Isuzu Tyre Pressure Monitoring | • |
| | Alarms | • |
| Aerodynamics | Air Deflectors | • |

• Fitted as Standard • Option to Fit

**Australia's no.1 truck, made more you.**

Arc White | Al. Grey | Sahara Beige | Marine Blue | Woodland Green | Cardinal Red

Colours shown are indicative only, additional costs may apply. Availability on request only for limited models. Check with your local dealer.

# Chassis

## Steering

| | |
|---|---|
| **Type** | Power assisted recirculating ball |
| **Turns Lock To Lock** | 5.40 |
| **Wheel Lock Angle** | 42.5° (inside wheel) / 32.7° (outside wheel) |

## Suspension

| | |
|---|---|
| **Front** | **Type:** Single stage steel taper leaf spring |
| | **Other Features:** Double acting hydraulic shock absorbers |
| **Rear** | **Type:** Taper leaf main, taper leaf helper spring |
| | **Other Features:** Double acting hydraulic shock absorbers |

## Fuel and AdBlue® Tanks

| | | |
|---|---|---|
| **Diesel Tank** | Type | Frame mounted tank |
| | Capacity[4] (L) | 100 |
| | Material | Steel |
| | Features | Lockable Cap |
| **AdBlue® Tank** | Type | Frame mounted tank |
| | Capacity[4] (L) | 14 |
| | Material | High-Density Polyethylene |

## Electrical Systems

| | |
|---|---|
| **Voltage (V)** | 24 |
| **Alternator (A)** | 90 |
| **Starter Motor (kw)** | 3.70 |
| **Battery** | 2 x 80D26L 600 (CCA) |
| **CAN bus Provision** | FMS Provision |

## Chassis Frame

| | |
|---|---|
| **Type** | Cold rivetted ladder frame |
| **Material** | HT540 steel |
| **Dimension** | Side Rail (mm): 180 x 65 x 5.3<br>Rear frame width (mm): 750 |

## Axle

| | | |
|---|---|---|
| **Front** | Description | Isuzu F031 |
| | Type | Reverse Elliot I-beam |
| | Capacity | 3,100 kg |
| **Rear** | Description | Isuzu R050 |
| | Type | Full floating banjo with four differential pinions |
| | Capacity | 5,000 kg |
| | Ratio | 5.125 |

## Wheels & Tyres

| | | |
|---|---|---|
| **Front** | Wheels | 16 x 5.5J five stud steel |
| | Tyres | 195/85R16 114/112 L Michelin |
| | Front Axle Tyre Rating | 2,360 kg |
| **Rear** | Wheels | 16 x 5.5J five stud steel |
| | Tyres | 195/85R16 114/112 L Michelin |
| | Rear Axle Tyre Rating | 4,480 kg |
| **Spare** | Wheels | 16 x 5.5J five stud steel |
| | Tyres | 195/85R16 114/112 L Michelin |

## Brakes

| | |
|---|---|
| **Type** | Ventilated disc/disc with dual circuit hydraulic control, integrated boost assist |
| **Front Diameter (mm)** | 293 |
| **Rear Diameter (mm)** | 293 |
| **Park Brake** | Electric Park Brake (EPB), drum mounted on rear of transmission |

# Weights & Dimensions

## Weights (kg)

| Models | Ratings[5] | | Loading Limit[5] (at ground) | | Cab Chassis Weight[6] | | | Order Code |
|---|---|---|---|---|---|---|---|---|
| | GVM | GCM | Front | Rear | Front | Rear | Total | |
| **NNR 45-150 DT D34 TRAY** | 4,500 | 8,000 | 2,360 | 4,480 | 1,798 | 1,020 | 2,818 | NS-NNRFB-HDS |
| **NNR 45-150 DT C34 TRAY** | 4,500 | 8,000 | 2,360 | 4,480 | 1,964 | 1,041 | 3,005 | NS-NNRGB-HDS |

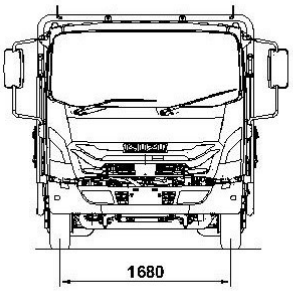


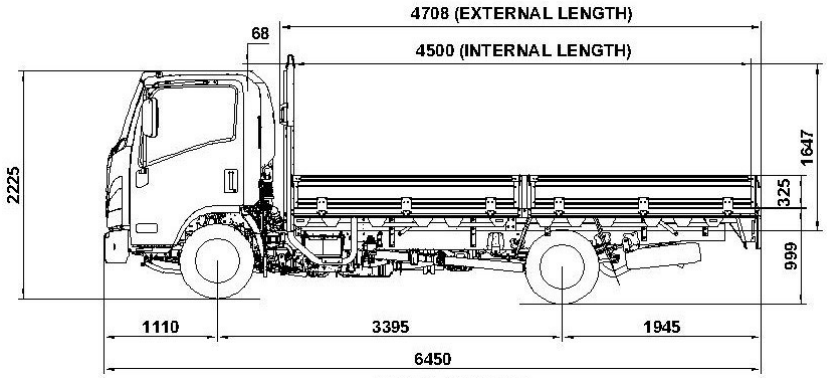


NNR 45-150 DT D34

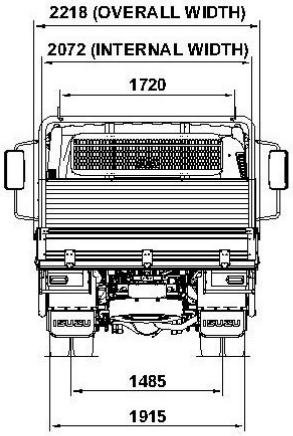


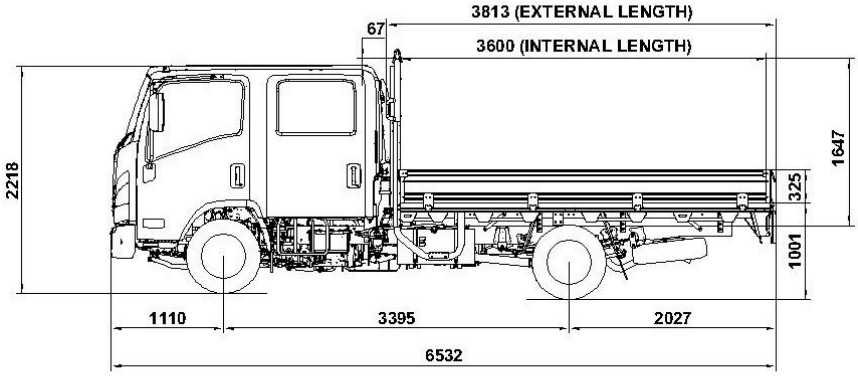


NNR 45-150 DT C34

| TURNING CICLE (KERB TO KERB) |
|---|
| D34 12 m<br>C34 12 m |

# Cabin Features

## General Features

| | |
|---|---|
| AUDIBLE WARNING | Reverse alarm |
| ENGINE ACCESS | Manual cab tilt to 45° with torsion bar assistance |
| | Access hatch under driver's seat and tiltable front passenger seat (Crew cab) |
| EXTERIOR LIGHTING | Bi-LED Headlamps with LED Daytime Running Lamps (DRL) |
| | Front LED fog lamps |
| | LED tail lamps |
| | Roof mounted clearance lamps |
| FRONT BUMPER | 3-piece resin,body coloured |
| GRILLE | Silver paint |
| MIRRORS | Heated and powered exterior main mirrors with flat glass and adjustable convex "spot" mirror |
| SECURITY | Passive Entry and Start System (PESS) with remote central locking and immobiliser |
| STEPS | Heavy duty anti-slip steps |
| WIPERS | Two speed windscreen wipers with intermittent wipe mode |

## Driver Control

| | |
|---|---|
| ENGINE | Cruise control |
| | DPD manual regeneration switch |
| | Idle speed control |
| GENERAL CONTROLS | Windscreen wipers (2 speed and intermittent modes),washers,exhaust brake,turn signals |
| SAFETY SYSTEMS | On/Off and Adjustable safety systems (for more details see owner's manual) |
| STEERING WHEEL CONTROLS | ADAS controls |
| | Multi Information display controls |
| | Multimedia controls (inc. phone) |
| TRANSMISSION | Gear selection control with P-R-N-D and sequential shift positions |

Images are not representative of model

## Cabin Interior

| | |
|---|---|
| AIR CONDITIONING | Auto climate control |
| DOOR WINDOWS | Electric control |
| ENTRY ASSIST GRIPS | Door and roof pillar mounted |
| INTERIOR LIGHTING | LED lamp |
| OCCUPANCY | Driver's bucket seat equipped with mechanical suspension and weight adjustment to 130kg |
| | Driver's bucket seat (Crew cab) |
| | Passenger bench seat with 2 seat capacity |
| | Rear bench seat with 4 seat capacity (Crew cab) |
| POWER OUTLET | 24V socket |
| | USB port |
| SEATBELTS | Lap sash seatbelts in all outboard seating positions. Centre seat lap belts. |
| STEERING COLUMN | Tilt / telescopic adjustable |
| STORAGE | Overhead cabinet,2 cup holders,door pockets,centre phone storage pocket |

## MyISUZU Co-Pilot Audio Visual Unit

| | |
|---|---|
| OPERATING SYSTEM | Android Automotive |
| NAVIGATION | Truck tailored GPS based system + Live traffic and map content updates via smartphone link (live feed updates are provided for 3 years) |
| SCREEN TYPE | 10.1" High Definition with capacitive touch |
| RADIO | AM / FM / DAB+ |
| INTERNAL STORAGE CAPACITY | 32GB |
| SMARTPHONE INTEGRATION | Android Auto/Apple CarPlay compatible (wired) |
| | Phone storage pocket |
| | USB socket |
| | Wi-Fi connectivity |

## Instrumentation

| | |
|---|---|
| GENERAL INSTRUMENTATION | Digital odometer with integrated dual tripmeters |
| | Engine temperature and fuel/AdBlue® level |
| | Speedometer and tachometer |
| MULTI INFORMATION DISPLAY | Adjustable vehicle speed warning |
| | AEB,FCW,DWS,LDW,FACC,TMW System activation alerts |
| | CTW indicator |
| | Hourmeter |

# Service & Support

6 YEAR FACTORY WARRANTY 24/7 ROADSIDE ASSIST

3 YEAR BODY WARRANTY

ISUZU CARE

## Service Agreements

| | Isuzu Essentials | Isuzu Essentials Plus | Isuzu Total |
|---|---|---|---|
| | Available on new trucks only and paid upfront - up to 72 months or the first 6 scheduled services | Available on new trucks and trucks currently in use - up to 72 months old | For new trucks only,Isuzu Total is our most comprehensive service package |
| Check and Report Fault Codes | • | • | • |
| Wheel Bearing Re-pack & Lubricating All Joints | • | • | • |
| Globes – Stop,Tail,Number Plate,Indicator,Headlight,Interior | | • | • |
| Fan Belts & Coolant Hoses | | • | • |
| Wiper Blades,Relays & Fuses | | • | • |
| Engine,Transmission & Electrical Components | | | • |
| Brake & Suspension Components | | | • |
| Washer Fluids & Consumables | • | • | • |
| Labour | • | • | • |

## Dealer Network

| | |
|---|---|
| Service & Support | National Isuzu Truck Dealer Network |
| | Find dealer online |

## Warranty[9]

| | |
|---|---|
| Chassis | 6 Year Standard Warranty |
| | 250,000 km / Unlimited Hours |
| Body Equipment | 3 Years |
| Genuine Parts & Accessories | 3 Years Standard Warranty (When installed by an Isuzu Trucks Approved Dealership - Including Labor) |
| Service Intervals | 25,000 km or 12 Months or 500 hrs (whichever occurs first) |

## Roadside Assist

| | |
|---|---|
| Roadside Assist | 6 Year Roadside Support |
| | 24/7 Unlimited Km |

[1] Maximum towing capacity applies. Gross Trailer Mass (GTM) should not exceed towing vehicle weight. Limit is subject to government regulatory requirements. To utilise GCM, the vehicle must be fitted with towing equipment suited to meet the required GCM ratings in compliance to local regulations.

[2] Performance values are theoretically calculated based on the vehicle at GVM. Real world figures may vary based on driving conditions, vehicle configuration, load and environmental factors.

[3] Accessory Installer must ensure all fitted accessories comply with local road authority regulations and do not compromise safety or certification requirements (eg: ADR compliance)

[4] As shown on tank. Volume of fuel/AdBlue® that can be added to a near-empty tank will vary according to operating conditions.

[5] Vehicle ratings and axle weight limits are subject to government regulatory requirements. Consult your Isuzu dealer to select the correct vehicle for your specific application.

[6] Manufactures nominal tare mass, includes tools, spare wheel (if standard), 10 Litres of fuel and 10 Litres of AdBlue®. Weights subject to ± 3% tolerance.

[7] Drawing for reference only. Refer to the Isuzu Body Builder Guide for details.

[8] Turning circle dimensions are based on manufacturers calculations and may vary under real-world conditions.

[9] Subject to the conditions outlined in the IAL New Vehicle Warranty. All Isuzu warranties are subject to mandatory prescribed terms under Australian Consumer Law including consumer guarantees. For further information please visit isuzu.com.au or contact your local dealer.

ISUZU AUSTRALIA LIMITED ABN 97 006 962 572 ("IAL"). The information in this specification sheet was correct at time of Publication, all measurements, specifications and equipment are subject to change without notice. Some equipment may have been changed and/or is available at extra cost. IAL may make changes at any time without notice, in prices, colours, materials, equipment and models. IAL makes all reasonable attempts to ensure the availability of all vehicles and equipment. The information in this specification sheet is general in nature. Your Isuzu dealer can confirm all measurements, specifications and vehicle / equipment availability upon request. To the extent permitted by the law, IAL is not liable to any person as result of reliance on the content of this specification sheet. Our National Customer Care Centre provides you access to a team of specialists with years of training. A conversation with an Isuzu specialist is as easy as contacting the team on 1800 035 640 or customercare@isuzu.net.au.

**Isuzu Australia Limited**

www.isuzu.com.au